APPENDIX

APPENDIX A

Measured parameters of the solar parabolic disk concentrator system

Table 3 Measured parameters of the solar parabolic disk concentrator system
Test Date: 6 November 2004
Case 1: Focal length of 165 [cm]

Interval time	Global radiation [w/m^2]	Pyrano meter voltage [mV]	Ambient temp. [°c]	Temperature at each point [°c]									
				9	4	1	2	6	7	3	1	5	8
9:00 - 9:05	425	1.3	32.7	98.2	124.0	160.4	132.8	96.2	117.0	129.6	160.4	127.5	87.9
9:05 - 9:10	435	1.4	33.3	86.7	116.0	155.5	115.7	84.1	109.6	125.3	155.5	116.6	73.9
9:10 - 9:15	446	1.4	32.7	89.4	119.1	157.4	118.0	86.3	111.5	126.2	157.4	118.0	75.8
9:15 - 9:20	480	1.5	33.7	96.1	124.6	162.2	118.1	91.9	111.7	128.2	162.2	119.9	82.8
9:20 - 9:25	520	1.5	34.6	91.1	120.6	158.2	117.9	90.3	108.8	124.6	158.2	117.9	80.2
9:25 - 9:30	540	1.5	34.0	95.2	125.6	163.2	120.9	95.3	110.6	130.1	163.2	120.2	86.1
9:30 - 9:35	536	1.5	34.0	93.6	123.5	161.4	118.5	93.9	109.5	127.6	161.4	119.1	84.2
9:35 - 9:40	540	1.5	33.4	77.9	108.2	139.8	96.1	74.3	94.2	113.3	139.8	99.2	97.0
9:40 - 9:45	556	1.5	34.0	83.4	113.5	140.1	109.6	84.8	96.8	112.1	140.1	98.1	82.0
9:45 - 9:50	575	1.6	34.2	79.7	113.5	138.7	96.1	74.7	101.7	112.3	138.7	98.7	65.7
9:50 - 9:55	605	1.6	34.5	85.1	118.2	146.8	107.4	82.8	105.4	119.2	146.8	107.1	71.2
9:55 - 10:00	600	1.6	35.0	90.2	121.3	155.2	119.5	84.6	110.6	125.0	155.2	117.1	75.8
10:00 - 10:05	610	1.6	35.0	83.3	116.1	146.6	103.8	78.8	103.2	117.7	146.6	105.6	68.7
10:05 - 10:10	625	1.6	34.4	79.4	109.7	139.9	97.9	72.8	99.0	114.3	139.9	101.8	65.1
10:10 - 10:15	645	1.6	35.2	80.6	111.5	144.6	106.0	75.6	106.7	118.0	144.6	107.3	66.7
10:15 - 10:20	660	1.7	35.6	98.4	129.3	167.7	126.5	91.8	128.2	139.2	167.7	126.4	79.9
10:20 - 10:25	675	1.6	35.3	89.8	126.8	156.6	107.8	84.1	114.0	128.9	156.6	111.3	72.5
10:25 - 10:30	685	1.7	35.8	77.4	114.7	135.1	96.5	74.3	95.2	106.2	135.1	97.8	67.3
10:30 - 10:35	700	1.6	36.0	77.9	113.1	136.6	92.2	73.7	95.2	108.2	136.6	95.7	66.5
10:35 - 10:40	710	1.6	35.5	77.2	112.4	137.0	89.2	72.9	95.5	108.1	137.0	93.8	65.1
10:40 - 10:45	728	1.6	36.0	77.9	112.5	137.0	94.5	72.8	96.9	109.8	137.0	96.6	65.4
10:45 - 10:50	740	1.6	36.1	92.5	126.2	156.2	106.3	85.0	111.5	123.7	156.2	110.8	74.4
10:50 - 10:55	755	1.7	35.0	73.9	107.6	137.6	87.4	68.5	95.7	108.3	137.6	96.0	64.2
10:55 - 11:00	760	1.7	35.0	77.8	116.4	140.1	101.2	74.2	95.8	109.5	140.1	98.9	66.7
11:00 - 11:05	775	1.7	36.6	78.7	113.7	139.9	99.0	75.5	95.1	110.1	139.9	100.1	68.6

Table 3 (cont.)
Test Date: 6 November 2004
Case 1: Focal length of 165 [cm]

Interval time	Global radiation (w/m^2)	Pyrano meter voltage (mV)	Ambient temp. (°c)	Temperature at each point									
				9	4	1	2	6	7	3	1	5	8
11:05 - 11:10	775	1.7	36.5	91.5	126.2	163.2	119.0	89.5	114.9	129.2	163.2	119.6	78.4
11:10 - 11:15	780	1.8	36.1	95.8	125.9	166.3	131.6	96.3	114.5	129.7	166.3	130.7	87.2
11:15 - 11:20	788	1.8	35.4	90.9	123.4	163.6	118.6	86.7	110.2	129.8	163.6	118.9	77.9
11:20 - 11:25	785	1.8	37.1	96.7	132.3	172.3	128.5	95.8	120.9	137.0	172.3	129.4	84.0
11:25 - 11:30	800	1.8	37.8	90.9	122.7	162.2	123.7	91.5	109.3	125.6	162.2	124.3	82.8
11:30 - 11:32	817	1.8	37.1	92.2	125.2	164.9	122.9	91.0	112.3	128.2	164.9	122.8	82.0
11:32 - 11:35	825	1.8	38.1	91.2	141.5	181.3	138.8	90.1	124.9	141.9	181.3	135.6	95.1
11:35 - 11:40	825	1.8	36.7	91.9	128.0	168.6	124.6	89.3	109.4	131.5	168.6	120.5	84.1
11:40 - 11:45	826	1.8	37.9	90.9	128.5	163.4	113.2	86.8	108.1	129.9	163.4	113.6	79.9
11:45 - 11:50	826	1.9	37.7	90.3	129.2	160.3	112.8	85.6	115.2	128.7	160.3	114.7	76.4
11:50 - 11:55	820	1.9	37.0	80.9	115.1	144.0	97.6	75.5	103.2	117.3	144.0	101.1	67.5
11:55 - 12:00	827	1.9	37.6	94.2	127.4	160.4	115.2	91.7	107.7	123.7	160.4	114.6	84.9
12:00 - 12:05	830	1.9	37.6	103.4	141.7	182.4	132.3	103.5	126.3	146.6	182.4	134.1	92.1
12:05 - 12:10	845	1.9	37.5	79.2	114.9	144.0	97.6	75.6	98.2	117.2	144.0	102.5	68.1
12:10 - 12:15	840	1.9	37.3	90.8	125.0	162.1	118.6	86.5	117.3	132.4	162.1	118.2	77.5
12:15 - 12:20	843	1.9	37.5	84.8	121.2	157.9	116.4	88.6	106.6	128.5	157.9	116.8	78.1
12:20 - 12:25	826	1.9	37.7	94.2	130.9	169.3	125.6	91.4	123.9	137.1	169.3	126.8	79.2
12:25 - 12:30	860	2.1	38.3	101.7	135.9	168.8	122.1	93.8	122.1	138.3	168.8	123.1	82.6
12:30 - 12:35	855	2.0	37.8	89.6	125.4	153.6	100.5	82.8	105.4	123.6	153.6	105.0	73.4
12:35 - 12:40	863	2.0	37.8	85.5	114.3	165.0	120.7	90.6	109.4	151.1	165.0	118.4	80.2
12:40 - 12:45	861	2.0	36.6	84.3	113.9	164.0	118.9	89.6	101.7	115.4	164.0	122.8	79.9
12:45 - 12:50	830	1.9	38.6	105.7	142.7	187.2	143.9	105.1	142.7	156.3	187.2	143.7	94.7
12:50 - 12:55	833	1.9	32.2	88.0	121.2	149.6	110.4	86.8	97.5	114.8	149.6	97.6	68.0
12:55 - 13:00	840	2.0	33.4	96.4	132.5	172.9	128.3	95.1	125.3	138.1	172.9	120.6	94.2
13:00 - 13:05	805	2.0	35.9	84.4	121.6	157.7	116.2	88.5	107.0	123.7	157.7	116.4	78.2

Table 3 (cont.)
Test Date: 6 November 2004
Case 1: Focal length of 165 [cm]

Interval time	Global radiation (w/m^2)	Pyrano meter voltage (mV)	Ambient temp. (°c)	Temperature at each point									
				9	4	1	2	6	7	3	1	5	8
13:05 - 13:10	840	2.2	34.2	95.1	125.3	166.6	131.4	96.8	117.5	137.4	166.6	130.2	87.3
13:10 - 13:15	865	2.4	37.9	90.8	122.7	162.6	123.5	91.4	108.7	128.5	162.6	124.2	82.5
13:15 - 13:20	825	2.2	35.8	96.4	131.2	171.9	128.6	96.5	126.3	138.5	171.9	129.4	84.3
13:20 - 13:25	305	2.2	37.5	98.2	134.1	173.8	130.5	94.2	126.3	141.5	173.8	123.8	96.4
13:25 - 13:30	230	2.4	37.5	59.1	94.3	124.6	77.4	55.2	94.7	100.6	124.6	82.1	65.4
13:30 - 13:35	845	2.6	37.3	76.5	110.4	140.9	94.3	71.2	98.2	110.3	140.9	98.4	64.2
13:35 - 13:40	175	1.8	35.5	59.7	95.2	125.9	77.4	55.6	97.4	103.5	125.9	90.1	59.6
13:40 - 13:45	165	1.7	36.8	61.8	84.3	105.5	66.7	58.4	81.1	87.3	105.5	74.0	51.1
13:45 - 13:50	600	2.0	36.8	42.8	61.4	81.7	43.7	40.2	62.8	67.8	81.7	54.1	32.5
13:50 - 13:55	188	2.0	37.5	41.3	52.7	73.7	42.4	40.0	62.2	63.0	73.7	50.1	40.1
13:55 - 14:00	790	2.4	36.8	54.0	92.1	112.5	74.9	51.2	74.4	86.6	112.5	73.1	45.2
14:00 - 14:05	825	2.6	36.3	79.6	114.2	139.6	96.8	74.5	90.1	107.8	139.6	94.3	60.7
14:05 - 14:10	806	2.8	37.6	88.1	125.2	155.2	106.6	83.1	115.2	125.8	155.2	112.5	85.2
14:10 - 14:15	770	2.8	39.0	83.4	113.6	147.6	109.8	78.4	110.3	122.4	147.6	109.6	80.1
14:15 - 14:20	780	2.8	39.0	95.8	125.9	166.3	131.6	96.3	114.5	129.7	166.3	130.7	87.3
14:20 - 14:25	760	2.8	39.0	77.8	116.4	140.1	101.2	74.2	95.8	109.5	140.1	98.9	66.7
14:25 - 14:30	755	2.8	39.0	78.7	113.6	139.9	99.0	75.5	95.1	110.1	139.9	100.1	68.6
14:30 - 14:35	701	2.8	39.0	77.9	113.1	136.6	92.3	73.7	95.2	108.2	136.6	95.7	66.5
14:35 - 14:40	680	2.7	39.0	77.4	114.7	135.1	96.5	74.3	95.2	106.2	135.1	97.8	67.3
14:40 - 14:45	690	2.7	39.0	77.9	113.1	136.6	92.2	73.7	95.2	108.2	136.6	95.7	66.5
14:45 - 14:50	701	2.6	39.0	78.2	114.6	137.8	92.8	74.1	96.0	109.5	137.2	96.2	66.8
14:50 - 14:55	680	2.5	39.0	89.1	126.5	156.5	107.4	84.2	114.7	128.4	156.5	111.2	72.5
14:55 - 15:00	655	2.4	39.0	80.6	111.5	144.6	106.0	75.6	106.7	118.0	144.6	107.3	66.7

Table 4 Measured parameters of the solar parabolic disk concentrator system
Test Date: 7 November 2004
Case 2: Focal length of 170 [cm]

Interval time	Global radiation [w/m^2]	Pyrano meter voltage [mV]	Ambient temp. [°c]	Temperature at each point [°c]									
				9	4	1	2	6	7	3	1	5	8
9:00 - 9:05	430	1.5	31.9	84.3	104.8	151.0	121.6	88.1	107.7	143.4	151.0	116.8	79.4
9:05 - 9:10	440	1.5	32.0	88.0	108.3	158.0	120.1	90.2	115.5	151.6	158.0	121.8	81.1
9:10 - 9:15	460	1.5	32.2	88.8	111.1	161.1	128.3	92.5	116.8	154.8	161.1	123.6	82.7
9:15 - 9:20	476	1.5	32.3	85.8	106.0	156.5	123.1	87.3	113.6	149.6	156.5	116.4	77.1
9:20 - 9:25	490	1.6	33.3	89.1	109.7	160.8	125.7	90.6	114.2	153.7	160.8	120.0	81.4
9:25 - 9:30	500	1.6	32.8	90.4	110.0	164.5	134.9	94.6	119.0	158.2	164.5	128.9	85.4
9:30 - 9:35	520	1.6	33.5	95.4	119.0	169.5	132.5	99.2	119.2	154.9	169.5	126.5	86.9
9:35 - 9:40	536	1.7	32.1	89.5	110.4	160.3	121.3	34.2	106.3	144.2	160.3	117.4	86.2
9:40 - 9:45	538	1.7	33.4	90.3	111.2	173.2	129.1	96.9	114.2	159.1	173.2	122.2	86.3
9:45 - 9:50	565	1.7	33.7	98.4	120.7	173.2	123.9	104.1	114.2	159.1	173.2	127.2	94.6
9:50 - 9:55	600	1.7	33.1	89.8	109.9	163.8	125.4	93.2	108.3	151.3	163.8	117.9	84.1
9:55 -10:00	612	1.7	32.9	91.0	112.9	162.1	125.3	93.5	107.9	145.8	162.1	116.0	84.4
10:00 -10:05	695	1.8	33.5	87.6	105.1	155.5	111.2	87.5	102.8	147.3	155.5	109.5	78.3
10:05 -10:10	641	1.8	33.3	88.2	106.2	156.9	114.3	87.9	107.8	148.0	156.9	120.5	78.0
10:10 -10:15	652	1.8	33.5	94.1	110.5	161.2	120.1	92.1	107.6	153.4	161.2	122.6	84.2
10:15 -10:20	669	1.8	33.6	95.9	113.4	163.5	121.8	93.1	104.5	149.4	163.5	116.8	84.8
10:20 -10:25	680	1.8	34.5	97.8	117.4	176.1	125.6	98.2	117.1	160.5	176.1	131.9	86.8
10:25 -10:30	685	1.8	34.1	88.4	113.1	164.6	123.0	96.4	112.9	157.9	164.6	125.3	83.2
10:30 -10:35	695	1.9	35.0	84.5	105.2	157.6	111.9	85.4	103.8	145.3	157.6	112.4	75.8
10:35 -10:40	711	1.9	35.1	80.9	104.4	149.6	108.8	81.2	101.2	139.9	149.6	106.9	71.8
10:40 -10:45	709	1.9	36.3	82.4	106.3	153.5	111.9	84.1	106.9	144.6	153.5	110.8	73.5
10:45 -10:50	724	1.9	35.8	80.5	102.1	152.7	115.2	84.5	102.2	140.8	152.7	112.6	74.5
10:50 -10:55	735	1.9	35.1	81.5	104.8	151.6	110.7	84.6	102.8	139.4	151.6	109.9	73.2
10:55 -11:00	736	2.0	36.0	83.2	109.2	162.5	120.6	97.0	99.1	145.5	162.5	118.0	88.2
11:00 -11:05	758	2.0	34.9	80.3	104.5	152.8	116.4	83.3	102.1	144.8	152.8	113.3	74.0

Table 4 (cont.)
Test Date: 7 November 2004
Case 2: Focal length of 170 [cm]

Interval time	Global radiation (w/m^2)	Pyrano meter voltage (mV)	Ambient temp. (^oc)	Temperature at each point									
				9	4	1	2	6	7	3	1	5	8
11:05 -11:10	766	2.0	35.3	95.4	117.7	174.0	135.4	102.0	155.7	154.1	174.0	131.3	90.9
11:10 -11:15	775	2.0	34.8	95.4	117.1	173.8	146.2	102.7	116.0	155.4	173.8	136.0	89.5
11:15 -11:20	781	2.0	37.5	91.7	117.4	175.0	134.8	99.3	114.1	161.4	175.0	131.5	86.7
11:20 -11:25	781	2.0	35.9	74.0	97.0	142.3	107.9	79.4	92.2	129.1	142.3	105.6	72.2
11:25 -11:30	795	2.0	37.0	88.2	111.4	164.9	131.5	96.6	110.6	149.4	164.9	129.6	84.7
11:30 -11:32	812	1.9	35.9	92.7	116.9	171.4	132.0	100.6	112.9	152.8	171.4	130.5	89.1
11:32 -11:35	812	1.9	36.6	88.3	115.6	168.2	130.2	95.9	110.3	151.6	168.2	126.9	84.9
11:35 -11:40	814	1.9	36.7	85.4	112.1	164.9	129.1	93.4	108.5	149.5	164.9	125.3	81.7
11:40 -11:45	816	1.9	34.9	89.8	117.3	169.4	132.8	103.3	101.8	146.7	169.4	130.8	91.9
11:45 -11:50	832	1.9	34.8	99.6	127.1	188.2	148.9	116.3	116.4	162.5	188.2	145.7	102.9
11:50 -11:55	833	1.9	33.5	83.1	111.5	159.9	123.8	95.7	100.3	139.8	159.9	120.6	85.9
11:55 -12:00	832	1.9	32.7	88.2	115.1	165.9	130.4	96.3	105.4	148.6	165.9	127.6	84.4
12:00 -12:05	837	1.9	31.6	86.7	109.8	160.3	138.8	92.2	101.4	146.4	160.3	123.6	83.2
12:05 -12:10	837	1.9	32.4	86.1	111.9	166.6	134.3	95.8	106.5	150.4	166.6	130.0	83.8
12:10 -12:15	834	1.9	33.3	97.8	123.1	184.2	153.4	113.6	113.1	160.3	184.2	148.4	98.3
12:15 -12:20	799	1.9	32.1	89.4	115.2	169.2	129.5	101.8	100.3	151.3	169.2	128.1	88.6
12:20 -12:25	833	1.9	34.5	85.9	109.1	166.6	133.3	101.2	99.7	147.4	166.6	129.5	88.9
12:25 -12:30	833	1.9	36.0	97.7	123.6	182.0	139.3	106.2	116.4	162.9	182.0	138.8	91.2
12:30 -12:35	829	2.0	37.8	99.2	128.2	179.5	136.6	106.8	115.0	157.5	179.5	134.9	96.4
12:35 -12:40	820	2.0	37.8	106.8	134.9	186.0	139.8	114.1	118.5	164.5	186.0	141.5	101.4
12:40 -12:45	828	1.9	38.7	102.0	130.1	187.5	137.6	103.5	122.2	167.0	187.5	138.3	96.2
12:45 -12:50	826	2.0	37.0	86.5	114.2	161.4	120.0	92.1	103.1	148.9	161.4	119.9	82.1
12:50 -12:55	816	2.0	37.6	85.6	111.3	160.8	124.9	91.6	104.5	145.8	160.8	121.2	82.9
12:55 -13:00	826	2.2	37.8	86.6	116.0	165.0	129.2	95.7	109.4	151.1	165.0	125.8	85.5
13:00 -13:05	860	2.0	37.8	85.8	114.3	165.0	120.7	90.6	109.4	151.1	165.0	118.4	80.2

Table 4 (cont.)
Test Date: 7 November 2004
Case 2: Focal length of 170 [cm]

Interval time	Global radiation (w/m^2)	Pyrano meter voltage (mV)	Ambient temp. (°c)	Temperature at each point									
				9	4	1	2	6	7	3	1	5	8
13:05 -13:10	814	2.0	37.6	94.1	117.4	165.3	122.1	100.2	107.2	144.6	165.3	122.4	92.1
13:10 -13:15	820	2.0	37.8	106.8	134.9	186.0	139.8	114.1	118.5	164.5	186.0	141.5	101.4
13:15 -13:20	827	2.1	37.4	87.5	114.4	162.4	122.0	93.3	104.1	150.1	162.4	121.0	82.5
13:20 -13:25	817	2.0	37.4	90.6	119.9	169.2	122.1	91.9	112.8	158.0	169.2	121.1	81.7
13:25 -13:30	826	2.2	36.9	92.1	119.9	177.0	134.0	100.8	117.1	164.2	177.0	133.4	90.3
13:30 -13:35	805	2.1	37.8	91.5	117.7	176.5	137.4	99.6	116.2	165.0	176.5	135.6	89.4
13:35 -13:40	814	2.2	36.3	83.2	112.1	160.3	117.4	89.5	98.2	147.6	160.3	115.9	82.5
13:40 -13:45	806	2.3	37.3	88.5	114.6	166.0	125.5	91.8	115.8	155.4	166.0	123.7	81.4
13:45 -13:50	723	2.3	36.5	80.5	110.6	156.6	115.2	91.9	98.9	141.4	156.6	112.4	82.8
13:50 -13:55	762	2.5	37.3	88.5	113.9	164.7	119.3	93.4	106.9	147.6	164.7	119.4	84.1
13:55 -14:00	811	2.7	37.2	81.7	108.0	153.8	115.3	90.1	96.6	138.9	153.8	114.6	81.1
14:00 -14:05	774	2.4	37.6	90.8	116.6	164.4	123.3	95.1	109.3	149.0	164.4	120.9	86.0
14:05 -14:10	746	2.2	37.0	88.6	114.3	164.7	122.6	97.3	102.3	147.4	164.7	121.1	87.3
14:10 -14:15	530	2.0	37.3	74.6	92.1	147.3	100.4	81.2	105.3	134.4	147.3	99.1	74.3
14:15 -14:20	174	1.7	37.2	77.2	99.5	114.7	100.8	82.6	81.8	105.6	114.7	101.7	73.1
14:20 -14:25	470	1.9	37.7	86.5	111.7	124.7	109.0	88.2	86.2	111.5	124.7	110.6	77.2
14:25 -14:30	689	2.0	36.3	77.9	100.5	137.2	100.7	78.6	90.6	124.1	137.2	101.2	75.0
14:30 -14:35	655	1.9	37.1	75.4	100.0	141.5	103.5	84.6	102.1	140.6	141.5	101.5	74.8
14:35 -14:40	666	1.8	36.3	74.3	100.5	138.7	101.1	78.8	88.4	130.3	138.7	102.7	74.0
14:40 -14:45	647	1.8	35.9	77.2	106.0	148.1	103.7	87.7	93.0	134.6	148.1	104.2	80.2
14:45 -14:50	620	1.7	36.7	83.8	108.3	152.1	110.9	89.3	96.9	137.5	152.1	111.8	83.5
14:50 -14:55	612	1.7	36.9	79.7	104.3	143.8	105.4	83.0	94.2	137.2	143.8	106.6	76.6
14:55 -15:00	611	1.7	36.0	75.3	100.9	140.5	102.1	81.4	89.7	130.7	140.5	103.3	74.0

Table 5 Measured parameters of the solar parabolic disk concentrator system
Test Date: 8 November 2004
Case 3: Focal length of 175 [cm]

Interval time	Global radiation [w/m^2]	Pyrano meter voltage [mV]	Ambient temp. [°c]	Temperature at each point [°c]									
				9	4	1	2	6	7	3	1	5	8
9:00 - 9:05	420	1.3	31.9	92.5	124.9	132.9	121.4	94.5	84.3	113.3	132.9	101.8	83.9
9:05 - 9:10	429	1.3	32.0	100.3	129.8	136.0	125.6	104.1	120.7	128.4	136.0	131.8	95.4
9:10 - 9:15	448	1.4	32.2	104.0	133.3	143.0	135.1	106.2	111.5	136.6	143.0	136.8	97.1
9:15 - 9:20	475	1.5	32.3	101.8	134.0	141.5	130.0	103.3	129.6	134.6	141.5	141.4	93.1
9:20 - 9:25	518	1.5	33.3	109.4	145.0	154.5	142.0	113.2	121.2	145.9	154.5	148.5	101.9
9:25 - 9:30	522	1.6	33.8	101.5	109.1	136.5	127.8	92.8	91.0	114.1	136.5	93.9	80.6
9:30 - 9:35	530	1.6	35.3	102.1	118.1	133.8	103.5	89.9	89.4	110.9	133.8	90.5	76.3
9:35 - 9:40	546	1.6	35.8	113.3	132.8	137.4	110.7	100.0	93.7	117.7	137.4	98.9	85.7
9:40 - 9:45	558	1.7	36.6	110.3	134.6	142.8	106.9	95.3	88.8	115.2	142.8	93.3	83.0
9:45 - 9:50	592	1.7	39.7	103.6	133.7	139.7	117.7	96.0	94.8	119.4	139.7	99.6	83.1
9:50 - 9:55	579	1.8	35.7	96.5	125.6	137.3	121.4	93.6	95.9	119.3	137.3	101.3	83.1
9:55 -10:00	605	1.8	35.6	98.2	130.8	134.6	106.0	91.4	90.8	116.9	134.6	93.2	77.5
10:00 -10:05	619	1.8	35.6	101.8	132.4	138.0	123.4	94.2	99.2	121.5	138.0	101.1	81.4
10:05 -10:10	628	1.8	35.4	101.7	134.7	141.8	126.0	100.3	90.1	119.9	141.8	104.1	86.9
10:10 -10:15	640	1.8	34.4	107.1	136.3	145.4	131.4	103.9	99.9	125.6	145.4	111.5	91.2
10:15 -10:20	651	1.8	35.4	112.4	143.3	151.7	132.7	110.2	98.0	126.6	151.7	113.4	95.3
10:20 -10:25	683	1.9	36.2	106.1	140.6	148.1	125.8	107.7	96.5	125.5	148.1	107.5	93.5
10:25 -10:30	677	1.9	35.5	93.3	126.8	133.3	122.9	94.5	84.3	113.3	133.3	100.9	83.9
10:30 -10:35	695	1.9	34.2	100.0	134.8	142.6	131.5	103.8	93.8	120.9	142.6	113.6	88.7
10:35 -10:40	774	1.9	32.9	99.0	137.8	141.2	312.0	101.4	94.5	118.8	141.2	111.0	86.9
10:40 -10:45	723	2.0	36.9	94.8	136.3	136.9	125.6	95.7	95.0	120.5	136.9	110.0	82.9
10:45 -10:50	725	2.0	36.6	90.1	122.2	132.7	122.7	93.7	84.4	115.2	132.7	101.4	82.4
10:50 -10:55	730	2.0	34.7	85.0	115.9	124.7	112.6	87.0	81.7	104.8	124.7	91.6	76.4
10:55 -11:00	733	2.0	33.0	88.8	125.4	129.1	117.7	91.3	83.8	109.0	129.1	101.7	81.1
11:00 -11:05	745	2.0	33.6	95.6	126.2	134.0	119.3	91.7	87.7	115.3	134.0	99.6	79.9

Table 5 (cont.)
Test Date: 8 November 2004
Case 3: Focal length of 175 [cm]

Interval time	Global radiation (w/m^2)	Pyrano meter voltage (mV)	Ambient temp. (c^o)	Temperature at each point on the absorber									
				9	4	1	2	6	7	3	1	5	8
11:05 - 11:10	762	2.0	33.2	95.1	125.1	130.3	121.4	96.3	76.7	104.7	130.3	106.3	83.6
11:10 - 11:15	766	2.0	33.2	100.6	129.7	140.3	131.7	101.6	93.9	118.6	140.3	110.6	88.3
11:15 - 11:20	778	2.1	34.2	82.2	115.7	118.5	105.4	85.3	72.5	100.1	118.5	87.2	75.3
11:20 - 11:25	778	2.1	34.2	84.1	115.3	126.9	113.0	86.9	80.8	108.3	126.9	95.3	76.7
11:25 - 11:30	782	2.0	34.5	96.4	128.0	138.9	124.5	95.3	89.4	116.7	138.9	103.3	83.5
11:30 - 11:32	791	2.0	35.0	107.8	141.1	149.1	127.7	102.1	100.2	129.2	149.1	111.0	87.3
11:32 - 11:35	802	2.0	35.0	107.9	140.2	149.8	127.5	101.1	99.3	131.4	149.8	108.0	86.6
11:35 - 11:40	803	2.0	36.0	97.9	129.0	139.2	104.3	85.7	92.5	124.0	139.2	93.1	72.8
11:40 - 11:45	817	2.0	35.7	97.4	127.3	134.6	105.1	90.9	85.1	119.7	134.6	91.7	79.4
11:45 - 11:50	825	1.9	35.7	105.1	133.9	146.6	118.9	97.8	95.2	128.8	146.6	103.2	81.9
11:50 - 11:55	823	1.9	35.4	89.5	119.8	130.3	104.5	87.6	82.2	116.8	130.3	89.1	74.4
11:55 - 12:00	825	0.9	35.3	95.2	125.7	141.3	110.6	89.9	89.1	123.1	141.3	94.8	80.1
12:00 - 12:05	830	2.0	34.9	97.2	127.2	137.8	110.4	91.5	86.7	120.3	137.8	94.3	77.1
12:05 - 12:10	840	1.9	34.6	99.3	127.3	137.3	119.5	93.2	87.7	119.6	137.3	99.5	80.0
12:10 - 12:15	849	1.9	35.3	95.0	125.4	139.8	111.7	91.3	86.5	121.8	139.8	96.7	76.8
12:15 - 12:20	850	1.9	35.2	96.1	124.8	139.0	117.1	93.1	87.0	122.4	139.0	99.7	80.3
12:20 - 12:25	859	1.8	34.8	94.5	124.3	138.5	111.9	91.9	84.7	117.2	138.5	95.8	77.5
12:25 - 12:30	847	1.8	35.3	101.8	132.6	150.1	119.9	97.6	94.0	132.3	150.1	105.5	82.0
12:30 - 12:35	849	1.7	35.8	109.3	139.9	158.6	131.8	101.0	104.5	140.7	158.6	113.2	82.7
12:35 - 12:40	855	1.7	36.7	108.3	139.9	161.3	134.9	102.7	106.3	143.7	161.3	116.4	86.3
12:40 - 12:45	854	1.7	35.4	94.5	124.3	140.2	122.8	92.9	87.6	124.8	140.2	102.1	80.5
12:45 - 12:50	854	1.7	35.4	95.6	126.1	142.2	124.2	93.6	88.9	125.8	142.2	104.5	83.6
12:50 - 12:55	855	1.6	35.2	109.1	140.4	161.9	142.0	108.8	104.4	143.2	161.9	121.9	91.7
12:55 - 13:00	875	1.6	37.3	106.7	140.4	166.9	136.6	104.6	109.4	148.2	166.9	119.0	87.2
13:00 - 13:05	864	1.6	38.3	113.7	147.1	170.1	150.4	109.1	117.9	153.6	170.1	128.4	90.3

Table 5 (cont.)
Test Date: 8 November 2004
Case 3: Focal length of 175 [cm]

Interval time	Global radiation (w/m^2)	Pyrano meter voltage (mV)	Ambient temp. (c^o)	Temperature at each point									
				9	4	1	2	6	7	3	1	5	8
13:05 -13:10	889	1.7	37.2	101.0	133.7	156.7	137.6	97.2	108.6	143.5	156.7	116.2	82.3
13:10 -13:15	864	1.7	37.9	104.2	136.0	162.8	140.5	106.2	104.8	141.9	162.8	120.5	88.5
13:15 -13:20	836	1.7	38.2	104.5	136.5	159.2	131.4	101.4	107.2	138.5	159.2	114.5	85.8
13:20 -13:25	807	1.7	38.5	111.2	142.3	158.6	124.3	97.0	106.2	143.9	158.6	108.3	82.5
13:25 -13:30	791	1.8	38.8	107.5	135.8	159.3	128.9	100.3	106.3	141.0	159.3	112.5	84.7
13:30 -13:35	782	1.7	37.8	104.9	133.2	157.9	141.6	104.5	104.1	140.4	157.9	118.1	88.8
13:35 -13:40	788	1.8	38.3	95.0	120.6	153.9	113.9	84.5	104.9	137.5	153.9	97.3	73.8
13:40 -13:45	786	1.8	38.2	101.6	129.9	146.6	120.8	91.9	102.0	130.4	146.6	104.3	77.6
13:45 -13:50	783	1.7	37.3	114.6	144.3	164.5	139.4	110.1	109.8	143.2	164.5	122.1	92.1
13:50 -13:55	755	1.7	38.2	105.1	133.3	154.8	131.0	102.9	101.4	135.1	154.8	112.6	86.1
13:55 -14:00	750	1.6	37.8	96.7	125.2	145.0	118.0	90.3	99.9	134.3	145.0	102.9	76.9
14:00 -14:05	781	1.7	38.0	105.1	134.9	153.1	132.8	97.7	107.5	138.9	153.1	114.3	81.4
14:05 -14:10	768	1.7	37.4	105.9	144.5	159.0	132.6	101.7	115.6	147.3	159.0	122.6	83.3
14:10 -14:15	745	1.6	37.3	102.8	133.7	151.9	131.7	97.5	106.1	144.1	151.9	113.9	81.9
14:15 -14:20	744	1.6	36.3	98.1	125.6	149.1	121.8	88.9	102.6	140.6	149.1	107.5	74.0
14:20 -14:25	733	1.6	38.0	107.4	136.1	152.8	135.3	98.8	108.2	136.3	152.8	114.7	83.2
14:25 -14:30	709	1.5	37.3	92.0	122.7	140.2	112.7	85.4	98.4	131.7	140.2	98.4	72.1
14:30 -14:35	704	1.5	36.8	87.5	115.2	138.3	116.8	83.3	99.8	126.4	138.3	100.0	70.8
14:35 -14:40	691	1.4	36.5	96.2	126.4	144.5	124.5	90.7	103.1	131.4	144.5	108.5	76.7
14:40 -14:45	675	1.4	37.7	113.2	142.8	167.3	141.8	109.3	117.1	149.3	167.3	126.7	92.0
14:45 -14:50	667	1.3	37.2	91.0	133.1	143.9	116.5	85.9	108.5	136.3	143.9	109.0	73.2
14:50 -14:55	653	1.3	38.7	105.2	155.9	165.5	133.9	103.3	124.3	153.9	165.5	129.9	85.8
14:55 -15:00	645	1.3	38.2	104.2	132.1	163.1	149.6	102.1	117.2	147.8	163.1	126.0	86.5

APPENDIX B

Computed absorber thermal energy obtained from direct radiation

Table 6 Computed absorber thermal energy obtained from direct radiation
Test Date: 6 November 2004
Case 1: Focal length of 165 [cm]

Interval time	Global radiation [w/m^2]	Diffuse radiation [w/m^2]	Direct radiation [w/m^2]	Energy of direct radidtion [kJ]	Average Temperature [°c] at each radius*			Prameters of temperature profile model				Ambient temperature [°c]	Thermal energy in absorber [kJ]
					0 [m] (point 1)	0.03 [m] (point 2,3,4,5)	0.06 [m] (point 6,7,8,9)	A	B	C	D		
9:00 9:05	425	116.5	308.5	92.54	160.40	128.48	99.83	64.90	0	0.00133	95.50	32.7	64.82
9:05 9:10	435	119.2	315.8	94.74	155.50	118.40	88.58	70.45	0	0.00120	85.05	33.3	54.60
9:10 9:15	446	121.8	324.2	97.25	157.40	120.33	90.75	70.09	0	0.00119	87.31	32.7	57.12
9:15 9:20	480	128.9	351.1	105.33	162.20	122.70	95.63	68.79	0	0.00105	93.41	33.7	60.74
9:20 9:25	520	128.0	392.0	117.60	158.20	120.25	92.60	67.39	0	0.00117	90.81	34.6	58.16
9:25 9:30	540	128.0	412.0	123.60	163.20	124.20	96.80	68.77	0	0.00107	94.43	34.0	61.50
9:30 9:35	536	128.0	408.0	122.40	161.40	122.18	95.30	68.36	0	0.00106	93.04	34.0	60.13
9:35 9:40	540	133.3	406.7	122.01	139.80	104.20	85.85	54.75	0	0.00086	85.05	33.4	51.20
9:40 9:45	556	133.3	422.7	126.81	140.10	108.33	86.75	55.09	0	0.00104	85.02	34.0	51.49
9:45 9:50	575	136.8	438.2	131.45	138.70	105.15	80.45	60.66	0	0.00112	78.04	34.2	45.92
9:50 9:55	605	136.8	468.2	140.45	146.80	112.98	86.13	63.76	0	0.00119	83.04	34.5	50.91
9:55 10:00	600	139.5	460.5	138.15	155.20	120.73	90.30	69.33	0	0.00131	85.87	35.0	54.43
10:00 10:05	610	141.3	468.7	140.62	146.60	110.80	83.50	65.99	0	0.00115	80.62	35.0	48.27
10:05 10:10	625	143.9	481.1	144.33	139.90	105.93	79.08	63.89	0	0.00119	76.01	34.4	44.65
10:10 10:15	645	142.1	502.9	150.86	144.60	110.70	82.40	65.85	0	0.00124	78.75	35.2	46.97
10:15 10:20	660	145.7	514.3	154.30	167.70	130.35	99.58	71.94	0	0.00123	95.76	35.6	62.66
10:20 10:25	675	144.8	530.2	159.06	156.60	118.70	90.10	69.46	0	0.00114	87.14	35.3	54.20
10:25 10:30	685	146.6	538.4	161.53	135.10	103.80	78.55	59.57	0	0.00121	75.53	35.8	42.57
10:30 10:35	700	143.9	556.1	166.83	136.60	102.30	78.33	60.37	0	0.00107	76.23	36.0	42.35
10:35 10:40	710	143.9	566.1	169.83	137.00	100.88	77.68	61.00	0	0.00100	76.00	35.5	42.29
10:40 10:45	728	144.8	583.2	174.96	137.00	103.35	78.25	61.28	0	0.00113	75.72	36.0	42.32
10:45 10:50	740	144.8	595.2	178.56	156.20	116.75	90.85	67.30	0	0.00102	88.90	36.1	54.15
10:50 10:55	755	146.6	608.4	182.53	137.60	99.83	75.58	63.78	0	0.00100	73.82	35.0	41.00

* These points are bocated in Figure 7 (a)

Table 6 (cont.)
Test Date: 6 November 2004
Case 1: Focal length of 165 [cm]

Interval time	Global radiation [w/m^2]	Diffuse radiation [w/m^2]	Direct radiation [w/m^2]	Energy of direct radidtion [kJ]	Average Temperature [°c] at each radius*			Prameters of temperature profile model				Ambient temperature [°c]	Thermal energy in absorber [kJ]
					0 [m] (point 1)	0.03 [m] (point 2,3,4,5)	0.06 [m] (point 6,7,8,9)	A	B	C	D		
10:55 11:00	760	150.1	609.9	182.97	140.10	106.50	78.63	65.00	0	0.00124	75.10	35.0	43.71
11:00 11:05	775	151.0	624.0	187.21	139.90	105.73	79.48	63.25	0	0.00116	76.66	36.6	43.05
11:05 11:10	775	153.6	621.4	186.41	163.20	123.50	93.58	72.69	0	0.00114	90.51	36.5	56.53
11:10 11:15	780	155.4	624.6	187.38	166.30	129.48	98.45	71.92	0	0.00125	94.39	36.1	61.06
11:15 11:20	788	156.3	631.7	189.52	163.60	122.68	91.43	75.49	0	0.00115	88.11	35.4	55.71
11:20 11:25	785	157.2	627.8	188.35	172.30	131.80	99.35	76.76	0	0.00120	95.54	37.1	61.36
11:25 11:30	800	158.0	642.0	192.59	162.20	124.08	93.63	72.13	0	0.00120	90.07	37.8	55.32
11:30 11:32	817	158.9	658.1	197.43	164.90	124.78	94.38	73.68	0	0.00114	91.22	37.1	56.72
11:32 11:35	825	157.2	667.8	200.35	181.30	139.45	100.33	87.35	0	0.00138	93.96	38.1	61.66
11:35 11:40	825	158.0	667.0	200.09	168.60	126.15	93.68	78.38	0	0.00115	90.22	36.7	56.74
11:40 11:45	826	162.4	663.6	199.07	163.40	121.30	91.43	74.66	0	0.00108	88.74	37.9	53.42
11:45 11:50	826	166.0	660.0	198.01	160.30	121.35	91.88	71.48	0	0.00114	88.82	37.7	53.77
11:50 11:55	820	165.1	654.9	196.47	144.00	107.78	81.78	64.63	0	0.00109	79.37	37.0	44.87
11:55 12:00	827	164.2	662.8	198.84	160.40	120.23	94.63	67.60	0	0.00100	92.80	37.6	56.22
12:00 12:05	830	164.2	665.8	199.74	182.40	138.68	106.33	79.28	0	0.00112	103.12	37.6	67.41
12:05 12:10	845	163.3	681.7	204.50	144.00	108.05	80.28	66.74	0	0.00116	77.26	37.5	43.14
12:10 12:15	840	163.3	676.7	203.00	162.10	123.55	93.03	72.58	0	0.00119	89.52	37.3	55.21
12:15 12:20	843	168.6	674.4	202.31	157.90	120.73	89.53	72.44	0	0.00125	85.46	37.5	51.77
12:20 12:25	826	171.3	654.7	196.42	169.30	130.10	97.18	76.42	0	0.00125	92.88	37.7	58.76
12:25 12:30	860	182.8	677.2	203.17	168.80	129.85	100.05	71.89	0	0.00115	96.91	38.3	60.69
12:30 12:35	855	173.0	682.0	204.59	153.60	113.63	87.80	67.71	0	0.00101	85.89	37.8	49.86
12:35 12:40	863	173.0	690.0	206.99	165.00	126.13	91.43	78.70	0	0.00132	86.30	37.8	53.44
12:40 12:45	861	173.0	688.0	206.39	164.00	117.75	88.88	77.08	0	0.00098	86.92	36.6	52.51

* These points are bocated in Figure 7 (a)

Table 6 (cont.)
Test Date: 6 November 2004
Case 1: Focal length of 165 [cm]

Interval time	Global radiation [w/m^2]	Diffuse radiation [w/m^2]	Direct radiation [w/m^2]	Energy of direct radidtion [kJ]	Average Temperature [°c] at each radius*			Prameters of temperature profile model				Ambient temperature [°c]	Thermal energy in absorber [kJ]
					0 [m] (point 1)	0.03 [m] (point 2,3,4,5)	0.06 [m] (point 6,7,8,9)	A	B	C	D		
12:45 12:50	830	168.6	661.4	198.41	187.20	146.65	112.05	79.79	0	0.00127	107.41	38.6	71.27
12:50 12:55	833	166.9	666.1	199.84	149.60	111.00	85.08	66.60	0	0.00104	83.00	32.2	52.39
12:55 13:00	840	174.8	665.2	199.56	172.90	129.88	102.75	72.05	0	0.00099	100.85	33.4	67.82
13:00 13:05	805	178.3	626.7	188.00	157.70	119.48	89.53	71.53	0	0.00118	86.17	35.9	53.31
13:05 13:10	840	192.5	647.5	194.26	166.60	131.08	99.18	72.23	0	0.00133	94.37	34.2	63.34
13:10 13:15	865	213.7	651.3	195.40	162.60	124.73	93.35	73.23	0	0.00124	89.37	37.9	54.97
13:15 13:20	825	190.7	634.3	190.29	171.90	131.93	100.88	74.40	0	0.00117	97.50	35.8	63.89
13:20 13:25	305	190.7	114.3	34.29	173.80	132.48	103.78	72.44	0	0.00106	101.36	37.5	64.59
13:25 13:30	230	208.4	21.6	6.49	124.60	88.60	68.60	57.06	0	0.00090	67.54	37.5	31.91
13:30 13:35	845	229.5	615.5	184.64	140.90	103.35	77.53	65.55	0	0.00106	75.35	37.3	40.80
13:35 13:40	175	160.7	14.3	4.30	125.90	91.55	68.08	59.78	0	0.00105	66.12	35.5	33.47
13:40 13:45	165	150.1	14.9	4.47	105.50	78.08	63.10	43.16	0	0.00089	62.34	36.8	26.64
13:45 13:50	600	173.0	427.0	128.09	81.70	56.75	44.58	37.60	0	0.00083	44.10	36.8	9.44
13:50 13:55	188	173.9	14.1	4.22	73.70	52.05	45.90	27.87	0	0.00060	45.83	37.5	9.05
13:55 14:00	790	215.4	574.6	172.37	112.50	81.68	56.20	59.15	0	0.00121	53.35	36.8	21.55
14:00 14:05	825	232.2	592.8	177.84	139.60	103.28	76.23	66.09	0	0.00113	73.51	36.3	40.54
14:05 14:10	806	245.4	560.6	168.17	155.20	117.53	92.90	64.17	0	0.00102	91.04	37.6	54.41
14:10 14:15	770	249.9	520.1	156.04	147.60	113.85	88.05	62.28	0	0.00115	85.32	39.0	48.52
14:15 14:20	780	249.9	530.1	159.04	166.30	129.48	98.48	71.88	0	0.00125	94.42	39.0	58.43
14:20 14:25	760	249.9	510.1	153.04	140.10	106.50	78.63	65.01	0	0.00124	75.09	39.0	40.08
14:25 14:30	755	249.9	505.1	151.54	139.90	105.70	79.48	63.23	0	0.00116	76.67	39.0	40.87
14:30 14:35	701	249.9	451.1	135.34	136.60	102.33	78.33	60.38	0	0.00107	76.22	39.0	39.63
14:35 14:40	680	238.4	441.6	132.49	135.10	103.80	78.55	59.57	0	0.00121	75.53	39.0	39.67

* These points are bocated in Figure 7 (a)

Table 6 (cont.)
Test Date: 6 November 2004
Case 1: Focal length of 165 [cm]

Interval time	Global radiation [w/m^2]	Diffuse radiation [w/m^2]	Direct radiation [w/m^2]	Energy of direct radidition [kJ]	Average Temperature [°c] at each radius*			Prameters of temperature profile model				Ambient temperature [°c]	Thermal energy in absorber [kJ]
					0 [m] (point 1)	0.03 [m] (point 2,3,4,5)	0.06 [m] (point 6,7,8,9)	A	B	C	D		
14:40 14:45	690	238.4	451.6	135.49	136.60	102.30	78.33	60.37	0	0.00107	76.23	39.0	39.63
14:45 14:50	701	229.5	471.5	141.44	137.80	103.28	78.78	61.24	0	0.00109	76.56	39.0	40.18
14:50 14:55	680	220.7	459.3	137.78	156.50	118.38	90.13	69.17	0	0.00112	87.33	39.0	50.87
14:55 15:00	655	211.9	443.1	132.93	144.60	110.70	82.40	65.85	0	0.00124	78.75	39.0	43.52

Total energy of direct radition for a day is 11,413.32 [kJ]. Total thermal energy at absorber for a day is 2548.85 [kJ].

* These points are located in Figure 7 (a)

Table 7 Computed absorber thermal energy obtained from direct radiation
Test Date: 7 November 2004
Case 2: Focal length of 170 [cm]

Interval time	Global radiation [w/m^2]	Diffuse radiation [w/m^2]	Direct radiation [w/m^2]	Energy of direct radidtion [kJ]	Average Temperature [°c] at each radius*			Prameters of temperature profile model				Ambient temperature [°c]	Thermal energy in absorber [kJ]
					0 [m] (point 1)	0.03 [m] (point 2,3,4,5)	0.06 [m] (point 6,7,8,9)	A	B	C	D		
9:00 - 9:05	430	128.9	301.1	90.33	151.00	121.65	89.88	68.20	0	0.00000	82.80	31.9	56.08
9:05 - 9:10	440	128.0	312.0	93.60	158.00	125.45	93.70	70.05	0	0.00000	87.95	32.0	59.88
9:10 - 9:15	460	132.4	327.6	98.27	161.10	129.45	95.20	73.59	0	0.00000	87.51	32.2	60.85
9:15 - 9:20	476	135.1	340.9	102.28	156.50	123.78	90.95	71.83	0	0.00000	84.67	32.3	57.19
9:20 - 9:25	490	136.8	353.2	105.95	160.80	127.28	93.83	73.30	0	0.00000	87.50	33.3	58.96
9:25 - 9:30	500	138.6	361.4	108.42	164.50	133.00	97.35	75.89	0	0.00000	88.61	32.8	62.12
9:30 - 9:35	520	136.8	383.2	114.95	169.50	133.23	100.18	74.47	0	0.00000	95.03	33.5	64.94
9:35 - 9:40	536	145.7	390.3	117.10	160.30	123.33	79.05	91.25	0	0.00000	69.05	32.1	47.29
9:40 - 9:45	538	148.3	389.7	116.90	173.20	130.40	96.93	80.00	0	0.00000	93.20	33.4	62.76
9:45 - 9:50	565	150.1	414.9	124.47	173.20	132.73	102.83	73.25	0	0.00000	99.95	33.7	67.46
9:50 - 9:55	600	150.1	449.9	134.97	163.80	126.13	93.85	74.35	0	0.00000	89.45	33.1	59.67
9:55 -10:00	612	151.0	461.0	138.31	162.10	125.00	94.20	71.81	0	0.00000	90.30	32.9	60.17
10:00 -10:05	695	154.5	540.5	162.15	155.50	118.28	89.05	69.74	0	0.00000	85.77	33.5	54.93
10:05 -10:10	641	155.4	485.6	145.68	156.90	122.25	90.48	71.45	0	0.00000	85.45	33.3	56.18
10:10 -10:15	652	154.5	497.5	149.25	161.20	126.65	94.50	71.95	0	0.00000	89.25	33.5	59.56
10:15 -10:20	669	155.4	513.6	154.08	163.50	125.35	94.58	72.58	0	0.00000	90.92	33.6	59.97
10:20 -10:25	680	158.0	522.0	156.59	176.10	133.85	99.98	80.12	0	0.00000	95.98	34.5	64.54
10:25 -10:30	685	160.7	524.3	157.30	164.60	129.83	95.23	75.92	0	0.00000	88.68	34.1	59.67
10:30 -10:35	695	165.1	529.9	158.97	157.60	118.70	87.38	73.95	0	0.00000	83.65	35.0	52.23
10:35 -10:40	711	169.5	541.5	162.45	149.60	115.00	83.78	70.59	0	0.00000	79.01	35.1	48.42
10:40 -10:45	709	167.7	541.3	162.38	153.50	118.40	86.73	71.57	0	0.00000	81.93	36.3	50.02
10:45 -10:50	724	167.7	556.3	166.88	152.70	117.68	85.43	72.35	0	0.00000	80.36	35.8	49.40
10:50 -10:55	735	171.3	563.7	169.12	151.60	116.20	85.53	70.35	0	0.00000	81.25	35.1	50.16

* These points are located in Figure 7 (a)

Table 7 (cont.)
Test Date: 7 November 2004
Case 2: Focal length of 170 [cm]

Interval time	Global radiation [w/m^2]	Diffuse radiation [w/m^2]	Direct radiation [w/m^2]	Energy of direct radidtion [kJ]	Average Temperature [°c] at each radius*			Prameters of temperature profile model				Ambient temperature [°c]	Thermal energy in absorber [kJ]
					0 [m] (point 1)	0.03 [m] (point 2,3,4,5)	0.06 [m] (point 6,7,8,9)	A	B	C	D		
10:55 -11:00	736	173.0	563.0	168.89	162.50	123.33	91.88	74.34	0	0.00000	88.16	36.0	55.46
11:00 -11:05	758	176.6	581.4	174.43	152.80	119.75	84.93	75.35	0	0.00000	77.45	34.9	49.31
11:05 -11:10	766	175.7	590.3	177.09	174.00	134.63	111.00	64.48	0	0.00000	109.52	35.3	73.38
11:10 -11:15	775	174.8	600.2	180.06	173.80	138.68	100.90	81.21	0	0.00000	92.59	34.8	64.08
11:15 -11:20	781	176.6	604.4	181.33	175.00	136.28	97.95	84.06	0	0.00000	90.94	37.5	59.52
11:20 -11:25	781	177.5	603.5	181.06	142.30	109.90	79.45	67.79	0	0.00000	74.52	35.9	43.52
11:25 -11:30	795	174.8	620.2	186.06	164.90	130.48	95.03	77.12	0	0.00000	87.78	37.0	56.72
11:30 -11:32	812	170.4	641.6	192.48	171.40	133.05	98.83	77.67	0	0.00000	93.73	35.9	61.76
11:32 -11:35	812	171.3	640.7	192.22	168.20	131.08	94.85	79.81	0	0.00000	88.39	36.6	57.36
11:35 -11:40	814	171.3	642.7	192.82	164.90	129.00	92.25	79.77	0	0.00000	85.13	36.7	54.78
11:40 -11:45	816	167.7	648.3	194.48	169.40	131.90	96.70	78.54	0	0.00000	90.86	34.9	60.72
11:45 -11:50	832	166.0	666.0	199.81	188.20	146.05	108.80	84.83	0	0.00000	103.37	34.8	71.97
11:50 -11:55	833	166.0	667.0	200.11	159.90	123.93	91.25	73.71	0	0.00000	86.19	33.5	56.79
11:55 -12:00	832	164.2	667.8	200.34	165.90	130.43	93.58	80.00	0	0.00000	85.90	32.7	59.45
12:00 -12:05	837	163.3	673.7	202.10	160.30	129.65	90.88	82.06	0	0.00000	78.24	31.6	56.52
12:05 -12:10	837	163.3	673.7	202.10	166.60	131.65	93.05	82.77	0	0.00000	83.83	32.4	58.94
12:10 -12:15	834	166.0	668.0	200.41	184.20	146.30	105.70	87.39	0	0.00000	96.82	33.3	70.14
12:15 -12:20	799	166.0	633.0	189.91	169.20	131.03	95.03	80.20	0	0.00000	89.00	32.1	61.75
12:20 -12:25	833	168.6	664.4	199.31	166.60	129.83	93.93	79.19	0	0.00000	87.41	34.5	58.35
12:25 -12:30	833	166.9	666.1	199.84	182.00	141.15	102.88	85.44	0	0.00000	96.56	36.0	65.69
12:30 -12:35	829	173.9	655.1	196.52	179.50	139.30	104.35	80.07	0	0.00000	99.43	37.8	65.28
12:35 -12:40	820	172.2	647.8	194.35	186.00	145.18	110.20	80.55	0	0.00000	105.45	37.8	70.26
12:40 -12:45	828	170.4	657.6	197.28	187.50	143.25	105.98	86.42	0	0.00000	101.08	38.7	66.34

* These points are located in Figure 7 (a)

Table 7 (cont.)
Test Date: 7 November 2004
Case 2: Focal length of 170 [cm]

Interval time	Global radiation [w/m^2]	Diffuse radiation [w/m^2]	Direct radiation [w/m^2]	Energy of direct radidtion [kJ]	Average Temperature [°c] at each radius*			Prameters of temperature profile model				Ambient temperature [°c]	Thermal energy in absorber [kJ]
					0 [m] (point 1)	0.03 [m] (point 2,3,4,5)	0.06 [m] (point 6,7,8,9)	A	B	C	D		
12:45 -12:50	826	176.6	649.4	194.83	161.40	125.75	90.95	76.62	0	0.00000	84.78	37.0	53.31
12:50 -12:55	816	172.2	643.8	193.15	160.80	125.80	91.15	75.96	0	0.00000	84.84	37.6	52.83
12:55 -13:00	826	197.8	628.2	188.47	165.00	130.53	94.30	78.14	0	0.00000	86.86	37.8	55.46
13:00 -13:05	860	178.3	681.7	204.50	165.00	126.13	91.50	78.60	0	0.00000	86.40	37.8	53.52
13:05 -13:10	814	175.7	638.3	191.49	165.30	126.63	98.40	69.57	0	0.00000	95.73	37.6	59.74
13:10 -13:15	820	172.2	647.8	194.35	186.00	145.18	110.20	80.55	0	0.00000	105.45	37.8	70.26
13:15 -13:20	827	183.6	643.4	193.01	162.40	126.88	91.85	76.89	0	0.00000	85.51	37.4	53.76
13:20 -13:25	817	178.3	638.7	191.60	169.20	130.28	94.25	80.70	0	0.00000	88.50	37.4	56.33
13:25 -13:30	826	190.7	635.3	190.59	177.00	137.88	100.08	83.55	0	0.00000	93.45	36.9	62.04
13:30 -13:35	805	183.6	621.4	186.41	176.50	138.93	99.18	85.94	0	0.00000	90.56	37.8	60.14
13:35 -13:40	814	195.1	618.9	185.67	160.30	123.25	88.35	77.67	0	0.00000	82.63	36.3	51.74
13:40 -13:45	806	203.1	602.9	180.88	166.00	129.80	94.38	77.97	0	0.00000	88.03	37.3	56.20
13:45 -13:50	723	199.5	523.5	157.04	156.60	119.90	88.53	72.32	0	0.00000	84.28	36.5	51.71
13:50 -13:55	762	221.6	540.4	162.12	164.70	125.05	93.23	75.23	0	0.00000	89.47	37.3	55.56
13:55 -14:00	811	240.1	570.9	171.26	153.80	119.20	87.38	71.43	0	0.00000	82.37	37.2	49.83
14:00 -14:05	774	212.8	561.2	168.37	164.40	127.45	95.30	73.64	0	0.00000	90.76	37.6	56.89
14:05 -14:10	746	196.0	550.0	165.00	164.70	126.35	93.88	75.14	0	0.00000	89.56	37.0	56.32
14:10 -14:15	530	172.2	357.8	107.35	147.30	106.50	83.85	64.64	0	0.00000	82.66	37.3	46.49
14:15 -14:20	174	147.4	26.6	7.97	114.70	101.90	78.68	55.35	0	0.00000	59.35	37.2	36.33
14:20 -14:25	470	163.3	306.7	92.00	124.70	110.70	84.53	64.06	0	0.00000	60.64	37.7	40.65
14:25 -14:30	689	175.7	513.3	153.99	137.20	106.63	80.53	60.20	0	0.00000	77.00	36.3	43.87
14:30 -14:35	655	168.6	486.4	145.91	141.50	111.40	84.23	61.42	0	0.00000	80.08	37.1	46.49
14:35 -14:40	666	162.4	503.6	151.07	138.70	108.65	78.88	65.17	0	0.00000	73.53	36.3	42.33

* These points are located in Figure 7 (a)

Table 7 (cont.)
Test Date: 7 November 2004
Case 2: Focal length of 170 [cm]

Interval time	Global radiation [w/m^2]	Diffuse radiation [w/m^2]	Direct radiation [w/m^2]	Energy of direct radidtion [kJ]	Average Temperature [°c] at each radius*			Prameters of temperature profile model				Ambient temperature [°c]	Thermal energy in absorber [kJ]
					0 [m] (point 1)	0.03 [m] (point 2,3,4,5)	0.06 [m] (point 6,7,8,9)	A	B	C	D		
14:40 - 14:45	647	156.3	490.7	147.22	148.10	112.13	84.53	66.53	0	0.00000	81.57	35.9	48.47
14:45 - 14:50	620	153.6	466.4	139.91	152.10	117.13	88.38	67.31	0	0.00000	84.79	36.7	51.16
14:50 - 14:55	612	150.1	461.9	138.57	143.80	113.38	83.38	65.85	0	0.00000	77.95	36.9	45.95
14:55 - 15:00	611	150.1	460.9	138.27	140.50	109.25	80.10	65.10	0	0.00000	75.40	36.0	43.85

Total energy of direct radition for a day is 11,834.38 [kJ]. Total thermal energy at absorber for a day is 4121.73 [kJ].

* These points are located in Figure 7 (a)

Table 8 Computed absorber thermal energy obtained from direct radiation
Test Date: 8 November 2004
Case 3: Focal length of 175 [cm]

Interval time	Global radiation [w/m^2]	Diffuse radiation [w/m^2]	Direct radiation [w/m^2]	Energy of direct radiation [kJ]	Average Temperature [°c] at each radius*			Prameters of temperature profile model				Ambient temperature [°c]	Thermal energy in absorber [kJ]
					0 [m] (point 1)	0.03 [m] (point 2,3,4,5)	0.06 [m] (point 6,7,8,9)	A	B	C	D		
9:00 - 9:05	420	114.8	305.2	91.57	132.90	115.35	88.80	54.30	0	0.00193	78.60	31.9	51.84
9:05 - 9:10	429	114.8	314.2	94.27	136.00	128.90	105.13	80.04	0	0.00678	55.96	32.0	59.74
9:10 - 9:15	448	121.8	326.2	97.85	143.00	135.45	104.70	95.56	0	0.00656	47.44	32.2	58.32
9:15 - 9:20	475	128.9	346.1	103.83	141.50	135.00	106.95	98.44	0	0.00754	43.06	32.3	59.26
9:20 - 9:25	518	128.0	390.0	117.00	154.50	145.35	111.43	99.42	0	0.00600	55.08	33.3	63.69
9:25 - 9:30	522	139.5	382.5	114.75	136.50	111.23	91.48	43.66	0	0.00129	92.84	33.8	58.66
9:30 - 9:35	530	142.1	387.9	116.36	133.80	105.75	89.43	45.30	0	0.00094	88.50	35.3	52.16
9:35 - 9:40	546	143.0	403.0	120.89	137.40	115.03	98.18	40.94	0	0.00112	96.47	35.8	59.25
9:40 - 9:45	558	145.7	412.3	123.70	142.80	112.50	94.35	49.58	0	0.00096	93.22	36.6	55.68
9:45 - 9:50	592	151.9	440.1	132.04	139.70	117.60	94.38	50.27	0	0.00155	89.43	39.7	52.17
9:50 - 9:55	579	156.3	422.7	126.82	137.30	116.90	92.28	52.07	0	0.00174	85.23	35.7	53.12
9:55 -10:00	605	155.4	449.6	134.88	134.60	111.73	89.48	49.08	0	0.00143	85.52	35.6	51.65
10:00 -10:05	619	155.4	463.6	139.08	138.00	119.60	94.15	53.73	0	0.00213	84.27	35.6	54.48
10:05 -10:10	628	159.8	468.2	140.46	141.80	121.18	94.75	55.38	0	0.00179	86.42	35.4	55.25
10:10 -10:15	640	161.6	478.4	143.53	145.40	126.20	100.53	54.17	0	0.00195	91.23	34.4	61.08
10:15 -10:20	651	161.6	489.4	146.83	151.70	129.00	103.98	53.60	0	0.00163	98.10	35.4	64.82
10:20 -10:25	683	166.0	517.0	155.11	148.10	124.85	100.95	51.28	0	0.00164	96.82	36.2	62.62
10:25 -10:30	677	166.9	510.1	153.04	133.30	115.98	89.00	56.74	0	0.00238	76.57	35.5	49.36
10:30 -10:35	695	166.0	529.0	158.71	142.60	125.20	96.58	58.42	0	0.00204	84.18	34.2	56.11
10:35 -10:40	774	165.1	608.9	182.67	141.20	169.90	95.45	78.09	0	0.00285	63.11	32.9	47.00
10:40 -10:45	723	173.0	550.0	164.99	136.90	123.10	92.10	58.63	0	0.00209	78.27	36.9	48.60
10:45 -10:50	725	176.6	548.4	164.53	132.70	115.38	87.65	57.95	0	0.00241	74.75	36.6	47.06
10:50 -10:55	730	177.5	552.5	165.76	124.70	106.23	82.53	49.14	0	0.00171	75.56	34.7	44.72

* These points are located in Figure 7 (a)

Table 8 (cont.)
Test Date: 8 November 2004
Case 3: Focal length of 175 [cm]

Interval time	Global radiation [w/m^2]	Diffuse radiation [w/m^2]	Direct radiation [w/m^2]	Energy of direct radidtion [kJ]	Average Temperature [°c] at each radius*			Prameters of temperature profile model				Ambient temperature [°c]	Thermal energy in absorber [kJ]
					0 [m] (point 1)	0.03 [m] (point 2,3,4,5)	0.06 [m] (point 6,7,8,9)	A	B	C	D		
10:55 -11:00	733	177.5	555.5	166.66	129.10	113.45	86.25	57.82	0	0.00267	71.28	33.0	48.43
11:00 -11:05	745	178.3	566.7	170.00	134.00	115.10	88.73	54.23	0	0.00182	79.77	33.6	50.84
11:05 -11:10	762	180.1	581.9	174.57	130.30	114.38	87.93	56.29	0	0.00258	74.01	33.2	49.94
11:10 -11:15	766	178.3	587.7	176.30	140.30	122.65	96.10	56.52	0	0.00236	83.78	33.2	57.85
11:15 -11:20	778	182.8	595.2	178.57	118.50	102.10	78.83	48.62	0	0.00214	69.88	34.2	41.75
11:20 -11:25	778	184.5	593.5	178.04	126.90	107.98	82.13	52.43	0	0.00171	74.47	34.2	44.68
11:25 -11:30	782	180.1	601.9	180.57	138.90	118.13	91.15	56.77	0	0.00196	82.13	34.5	53.24
11:30 -11:32	791	178.3	612.7	183.80	149.10	127.25	99.35	58.92	0	0.00194	90.18	35.0	60.41
11:32 -11:35	802	178.3	623.7	187.10	149.80	126.78	98.73	59.39	0	0.00183	90.41	35.0	60.10
11:35 -11:40	803	180.1	622.9	186.87	139.20	112.60	87.23	56.35	0	0.00141	82.85	36.0	49.76
11:40 -11:45	817	176.6	640.4	192.13	134.60	110.95	88.20	50.37	0	0.00142	84.23	35.7	50.51
11:45 -11:50	825	170.4	654.6	196.38	146.60	121.20	95.00	56.97	0	0.00152	89.63	35.7	56.77
11:50 -11:55	823	171.3	651.7	195.52	130.30	107.55	83.43	52.11	0	0.00157	78.19	35.4	46.25
11:55 -12:00	825	79.5	745.5	223.66	141.30	113.55	88.58	56.35	0	0.00138	84.96	35.3	52.15
12:00 -12:05	830	176.6	653.4	196.03	137.80	113.05	88.13	54.51	0	0.00150	83.29	34.9	51.34
12:05 -12:10	840	169.5	670.5	201.15	137.30	116.48	90.05	55.68	0	0.00191	81.62	34.6	52.26
12:10 -12:15	849	165.1	683.9	205.17	139.80	113.90	87.40	57.67	0	0.00147	82.13	35.3	50.16
12:15 -12:20	850	165.1	684.9	205.47	139.00	116.00	89.13	56.69	0	0.00161	82.31	35.2	51.01
12:20 -12:25	859	159.8	699.2	209.76	138.50	112.30	87.15	55.75	0	0.00142	82.75	34.8	50.73
12:25 -12:30	847	156.3	690.7	207.22	150.10	122.58	93.85	62.29	0	0.00154	87.81	35.3	56.34
12:30 -12:35	849	152.7	696.3	208.88	158.60	131.40	99.38	67.88	0	0.00175	90.73	35.8	60.57
12:35 -12:40	855	151.9	703.1	210.94	161.30	133.73	100.90	68.85	0	0.00162	92.46	36.7	60.74
12:40 -12:45	854	150.1	703.9	211.17	140.20	118.50	88.88	59.86	0	0.00169	80.34	35.4	49.91

* These points are located in Figure 7 (a)

Table 8 (cont.)
Test Date: 8 November 2004
Case 3: Focal length of 175 [cm]

Interval time	Global radiation [w/m^2]	Diffuse radiation [w/m^2]	Direct radiation [w/m^2]	Energy of direct radidtion [kJ]	Average Temperature [°c] at each radius*			Prameters of temperature profile model				Ambient temperature [°c]	Thermal energy in absorber [kJ]
					0 [m] (point 1)	0.03 [m] (point 2,3,4,5)	0.06 [m] (point 6,7,8,9)	A	B	C	D		
12:45 -12:50	854	150.1	703.9	211.17	142.20	120.15	90.43	62.03	0	0.00201	80.17	35.4	51.89
12:50 -12:55	855	141.3	713.7	214.12	161.90	136.88	103.50	70.08	0	0.00201	91.82	35.2	64.07
12:55 -13:00	875	141.3	733.7	220.12	166.90	136.05	101.98	72.56	0	0.00153	94.34	37.3	61.80
13:00 -13:05	864	143.9	720.1	216.03	170.10	144.88	107.75	77.44	0	0.00221	92.66	38.3	64.73
13:05 -13:10	889	145.7	743.3	223.00	156.70	132.75	97.28	73.33	0	0.00219	83.37	37.2	56.35
13:10 -13:15	864	147.4	716.6	214.97	162.80	134.73	100.93	71.30	0	0.00178	91.50	37.9	60.12
13:15 -13:20	836	149.2	686.8	206.04	159.20	130.23	99.73	65.93	0	0.00151	93.27	38.2	59.03
13:20 -13:25	807	146.6	660.4	198.13	158.60	129.70	99.23	65.82	0	0.00151	92.78	38.5	58.29
13:25 -13:30	791	154.5	636.5	190.95	159.30	129.55	99.70	65.36	0	0.00148	93.94	38.8	58.78
13:30 -13:35	782	147.4	634.6	190.37	157.90	133.33	100.58	67.03	0	0.00171	90.87	37.8	58.56
13:35 -13:40	788	157.2	630.8	189.25	153.90	117.33	89.55	67.11	0	0.00118	86.79	38.3	51.20
13:40 -13:45	786	157.2	628.8	188.65	146.60	121.35	93.28	60.05	0	0.00165	86.55	38.2	52.89
13:45 -13:50	783	150.1	632.9	189.87	164.50	137.25	106.65	65.42	0	0.00165	99.08	37.3	65.86
13:50 -13:55	755	152.7	602.3	180.68	154.80	128.00	98.88	62.61	0	0.00161	92.19	38.2	58.14
13:55 -14:00	750	143.9	606.1	181.83	145.00	120.10	90.95	61.71	0	0.00173	83.30	37.8	50.95
14:00 -14:05	781	145.7	635.3	190.60	153.10	130.23	97.93	65.13	0	0.00174	87.97	38.0	55.63
14:05 -14:10	768	151.9	616.1	184.84	159.00	136.75	101.63	69.41	0	0.00182	89.59	37.4	58.79
14:10 -14:15	745	142.1	602.9	180.86	151.90	130.85	97.08	70.26	0	0.00240	81.64	37.3	55.28
14:15 -14:20	744	143.0	601.0	180.29	149.10	123.88	90.90	66.46	0	0.00159	82.64	36.3	51.60
14:20 -14:25	733	136.8	596.2	178.85	152.80	130.60	99.40	65.30	0	0.00212	87.50	38.0	57.38
14:25 -14:30	709	128.9	580.1	174.03	140.20	116.38	86.98	60.24	0	0.00155	79.96	37.3	47.21
14:30 -14:35	704	129.8	574.2	172.27	138.30	114.60	85.35	59.81	0	0.00154	78.49	36.8	46.19
14:35 -14:40	691	125.4	565.6	169.69	144.50	122.70	91.68	62.05	0	0.00171	82.45	36.5	51.27

* These points are located in Figure 7 (a)

Table 8 (cont.)
Test Date: 8 November 2004
Case 3: Focal length of 175 [cm]

Interval time	Global radiation [w/m^2]	Diffuse radiation [w/m^2]	Direct radiation [w/m^2]	Energy of direct radidtion [kJ]	Average Temperature [°c] at each radius*			Prameters of temperature profile model				Ambient temperature [°c]	Thermal energy in absorber [kJ]
					0 [m] (point 1)	0.03 [m] (point 2,3,4,5)	0.06 [m] (point 6,7,8,9)	A	B	C	D		
14:40 - 14:45	675	120.1	554.9	166.48	167.30	140.15	107.90	68.18	0	0.00168	99.12	37.7	66.10
14:45 - 14:50	667	118.3	548.7	164.61	143.90	123.73	89.65	64.27	0	0.00173	79.63	37.2	48.54
14:50 - 14:55	653	117.4	535.6	160.67	165.50	143.40	104.65	80.71	0	0.00260	84.79	38.7	60.47
14:55 - 15:00	645	115.7	529.3	158.80	163.10	138.88	102.50	72.00	0	0.00175	91.10	38.2	59.41

Total energy of direct radition for a day is 12,631.82 [kJ]. Total thermal energy at absorber for a day is 4002.85 [kJ].

* These points are located in Figure 7 (a)

APPENDIX C

MATLAB Source Code for solving mathematical distribution model in Equation (3.8) by using Newton-Raphson method

```
clear all;
%=========================================================================
% Newton-Raphson Method (for solving of five samplings, four parameters)
%=========================================================================
format short e;
% Data from the experiment
for i=1:n % n is the quantity of data groups.
% To paste the data of temperature from table of appendix in the brackets
t3 = [ ]; % Temperature at center of absorber
t2 = [ ]; % Temperature at radius of 0.03 m.
t1 = [ ]; % Temperature at radius of 0.06 m.
ta = [ ]; % Ambient temperature
% Model of "Gaussian +d"  ( y = (a*exp(((x-b)^2)/c))+d )
% Determination of initial trial values
% The temperature values for determination of "Gaussian distribution" with no d (Assume that "d" is
ambient temperature)
   ta = ta(i);
   t1 = t1(i)-ta;
   t2 = t2(i)-ta;
   t3 = t3(i)-ta;
   t4 = t2;
   t5 = t1;
% Distance or radius from center of absorber
   x1 = -0.06; x2 = -0.03; x3 = 0; x4 = 0.03 ;x5 = 0.06;
    X = [x1 x2 x3 x4 x5];
    T = [t1 t2 t3 t4 t5];
    Q = [1 x1^2 x1; 1 x2^2 x2; 1 x3^2 x3; 1 x4^2 x4; 1 x5^2 x5];
     p = [log(t1) log(t2) log(t3) log(t4) log(t5)].';
   aa = pinv(Q)*p;
   a0 = aa(1);
   a1 = aa(2);
   a2 = aa(3);
zima2 = -1/(2*a1);
   mu = (-a2)/(2*a1);
```

```
    A = exp(a0+(mu^2/(2*zima2)));
% Solution of initial trial value
    a = A;
    b = mu;
    c = -1*(zima2/2);
    d = ta;
x_old = [a;b;c;d];
  t1 = t1+ta;
  t2 = t2+ta;
  t3 = t3+ta;
  t4 = t2;
  t5 = t1;
% Result by substitute of first trial values in model
  f1 = (a*exp(((x1-b)^2)/c))+d-t1;
  f2 = (a*exp(((x2-b)^2)/c))+d-t2;
  f3 = (a*exp(((x3-b)^2)/c))+d-t3;
  f4 = (a*exp(((x4-b)^2)/c))+d-t4;
  f5 = (a*exp(((x5-b)^2)/c))+d-t5;
  F = [f1;f2;f3;f4;f5];
 while (abs(f1)>10^-12)&(abs(f2)>10^-12)&(abs(f3)>10^-12)&(abs(f4)>10^-12)&(abs(f5)>10^-12),
      F = [f1;f2;f3;f4;f5];
% Partial derivatives of Model Equations
      a11 = exp(((x1-b)^2)/c);
      a12 =((-2*a*exp(((x1-b)^2)/c))*(x1-b))/c;
      a13 =((-a*exp(((x1-b)^2)/c))*(x1-b)^2)/c^2;
      a14 = 1;
      a21 = exp(((x2-b)^2)/c);
      a22 =((-2*a*exp(((x2-b)^2)/c))*(x2-b))/c;
      a23 =((-1*a*exp(((x2-b)^2)/c))*(x2-b)^2)/c^2;
      a24 =1;
      a31 = exp(((x3-b)^2)/c);
      a32 = ((-2*a*exp(((x3-b)^2)/c))*(x3-b))/c;
      a33 = ((-1*a*exp(((x3-b)^2)/c))*(x3-b)^2)/c^2;
```

```
        a34 = 1;
        a41 = exp(((x4-b)^2)/c);
        a42 = ((-2*a*exp(((x4-b)^2)/c))*(x4-b))/c;
        a43 = ((-1*a*exp(((x4-b)^2)/c))*(x4-b)^2)/c^2;
        a44 = 1;
        a51 = exp(((x5-b)^2)/c);
        a52 = ((-2*a*exp(((x5-b)^2)/c))*(x5-b))/c;
        a53 = ((-1*a*exp(((x5-b)^2)/c))*(x5-b)^2)/c^2;
        a54 = 1;
d_function = [a11 a12 a13 a14; a21 a22 a23 a24; a31 a32 a33 a34; a41 a42 a43 a44; a51 a52 a53
a54];
 % Solving for 5 equations but 4 unknows with Pseudo invert metrice
 delta_x_new = pinv(d_function)*F;
     x_old = x_old - delta_x_new;
        a = x_old(1,1);
        b = x_old(2,1);
        c = x_old(3,1);
        d = x_old(4,1);
   end
        n = i % number of input data group
      Ans = [a;b;c;d] % Answer of the group
 end
```

APPENDIX D

MATLAB Source Code for determination of thermal energy in the absorber by Equation (3.11)

```
clear all;
%==========================================
% Determination of thermal energy in absorber
%==========================================
format short e;
% Constants of mild steel properties
 Cp=0.46; % Specific heat (kJ/kg*c)
 rho = 7854; % Density (kg/m^3)
 h = 0.008; % Thickness of absorber (meter)
 pi = 3.14;
 for i=1:n, % n is the quantity of data groups.
% To paste the constant of mathematic model in bracket
a=[ ]; b=[ ]; c=[ ]; d=[ ];
t=[ ];% Ambient temperature
 a=a(i); b=b(i); c=c(i); d=d(i); t=t(i);
 r=0; % reset their last value to be new value before doing a new task
 r=0:0.1/10000:0.1;
 q=r.*(((exp(((r-b).^2)./c)).*a)+d-t)*Cp*rho*pi*h*2;
 qt(i) = trapz(r,q);
end
 qtt=[qt(1); qt(2); qt(3); qt(4);qt(5); qt(6); qt(7);qt(8); qt(9); qt(10);
    qt(11); qt(12); qt(13); qt(14);qt(15); qt(16); qt(17);qt(18); qt(19);qt(20);
    qt(21); qt(22); qt(23); qt(24);qt(25); qt(26); qt(27);qt(28); qt(29);qt(30);
    qt(31);qt(32); qt(33); qt(34); qt(35);qt(36); qt(37); qt(38);qt(39);qt(40);
    qt(41); qt(42);qt(43);qt(44); qt(45); qt(46); qt(47);qt(48); qt(49);qt(50);
    qt(51); qt(52);qt(53); qt(54);qt(55); qt(56); qt(57); qt(58);qt(59);qt(60);
    qt(61);qt(62); qt(63);qt(64); qt(65);qt(66); qt(67); qt(68);qt(69);qt(70);
    qt(71);qt(72);qt(73)]
% to simplify copy and paste them on the cells of Excel programming
```

APPENDIX E

The drawing for fabricated link mechanism set

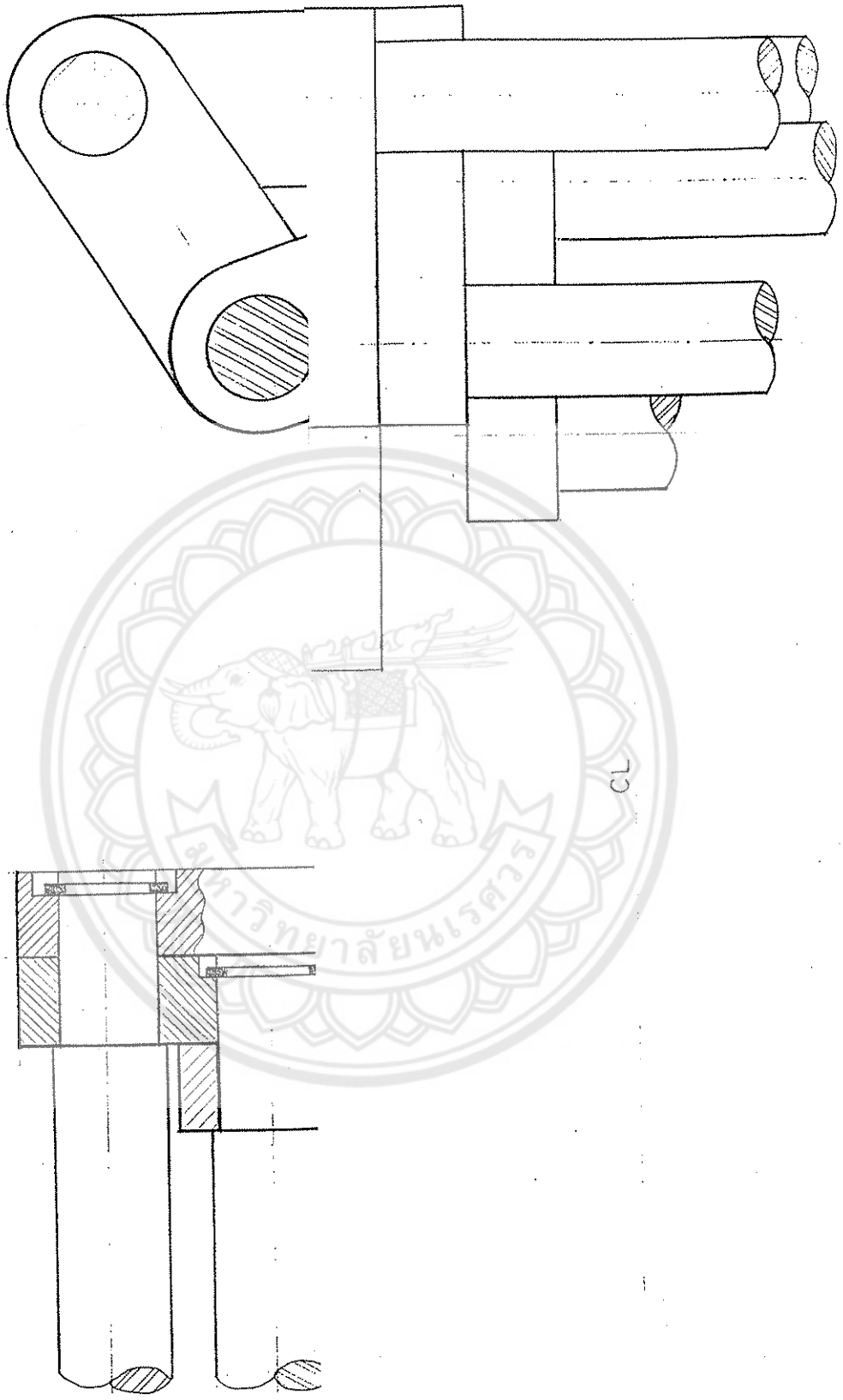

ขยายส่วน 1:1

APPENDIX F

The drawing for the constructed warm gear sets

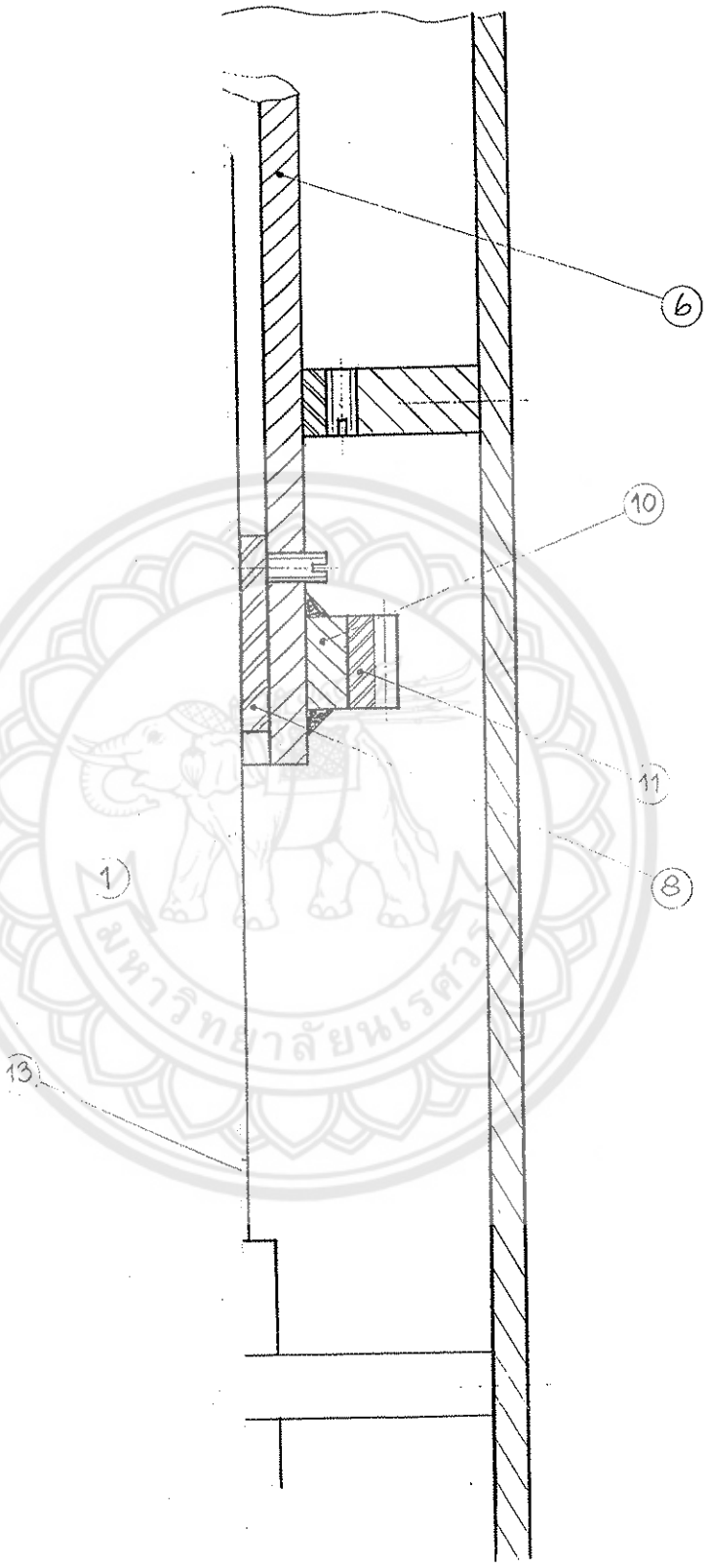

ผาตราส่วน 1:1